

Micronet®
Faster and Easier Networks

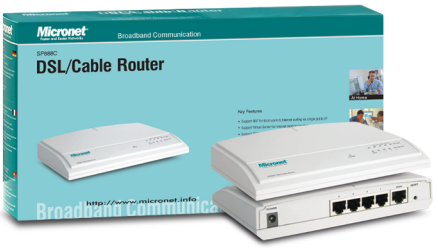

Micronet SP888C

DSL/Cable Router

Micronet SP888C Broadband DSL/Cable Router provides an economical solution for multiple users on LAN to access Internet simultaneously with one single account expense. Via the friendly web UI to setup and configure, the installation can be done in minutes. Micronet SP888C Broadband Router prevents certain denial-of-service attacks from outside networks on internal hosts, it also provides advanced features to monitor the connection status and the traffic in your network. For SOHO application, SP888C is ideal to create the first network environment.

Key Features

- Provide one 10/100M port for DSL/Cable Modem and four 10/100M ports for connection to internal network
- Support NAT for single account sharing for multiple users
- Support DMZ, Virtual Server, Port Forwarding and Special Application functions for Internet Service hosting
- Featured firewall functions secure local operation environment
- Support Universal Plug and Play (UPnP) for peer-to-peer network connectivity
- Friendly Web-based management interface for easy administrative task
- Firmware upgradeable for further function enhanced

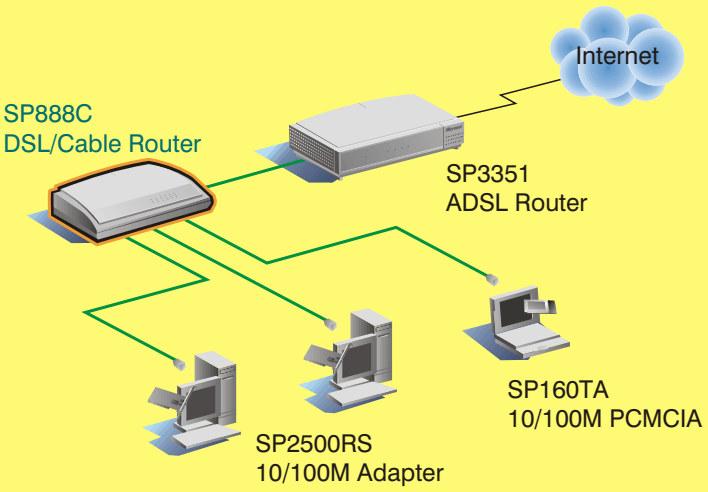

Micronet®
Faster and Easier Networks

DSL/Cable Router

SPECIFICATION AND PRODUCT FEATURES

Model	SP888C
Standards	IEEE802.3, IEEE802.3u
WAN Port	One RJ-45 10/100M Ports
LAN Port	Four RJ-45 10/100M Ports
Network Protocol	TCP/IP, NAT, ARP, ICMP, DHCP, PPPoE
Management	Web-based Management
Function	DMZ, Virtual Server, Port Forwarding, Special Application
Firewall	Hacker Prevention Client Filtering URL Blocking MAC Control
Electronic Specification	DC 12V, 0.5A
Operating Temperature	10˚C to 55˚ C
Dimensions (mm)	174 x 122 x 32

The product specifications are subject to change without prior notice.

ORDERING INFORMATION

Model	Description
SP888C	Broadband DSL/Cable Router with 4-Port Switch

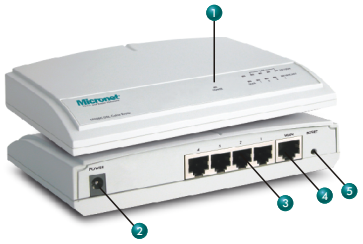

SP888C DSL/Cable Router

1. Status Indicator
2. Power Jack
3. Four 10/100M LAN Ports
4. One 10/100M WAN Port
5. Reset Button

COMPANION PRODUCTS

Consider the following Micronet products as a factor in your network planning.

- 56K Modem
- ADSL and Broadband
- Internet Camera
- ISDN TA / Router
- KVM Switch
- Media Converter
- Mobile Communication
- Network Interface Card
- PCMCIA and Compact Flash
- Powerline
- Print Server
- Switch and Hub/SOHO
- Switch/Enterprise
- USB Device Family
- VDSL
- VoIP Telephony
- Wireless LAN
- Wiring System

Copyright © 2005 Micronet Communications Inc. All technical information in this document is subject to change without prior notice. Micronet, EtherFast and MicroView are registered trademarks of Micronet Communications Inc. Microsoft, Windows, Windows 95, Windows 98, Windows NT, Windows 2000 are registered trademarks of Microsoft Corporation. Novell and Netware are registered trademarks of Novell Inc. All other trademarks and registered trademarks are properties of their respective holders.

Distributor:

TÜV CERT
ISO 9001

Manufacturer and Exporter
Spectrum Technologies Corp.
E-mail: sales@micronet.info; support@micronet.info Web:http://www.micronet.info